# Chrysler LIN versus CAN Network

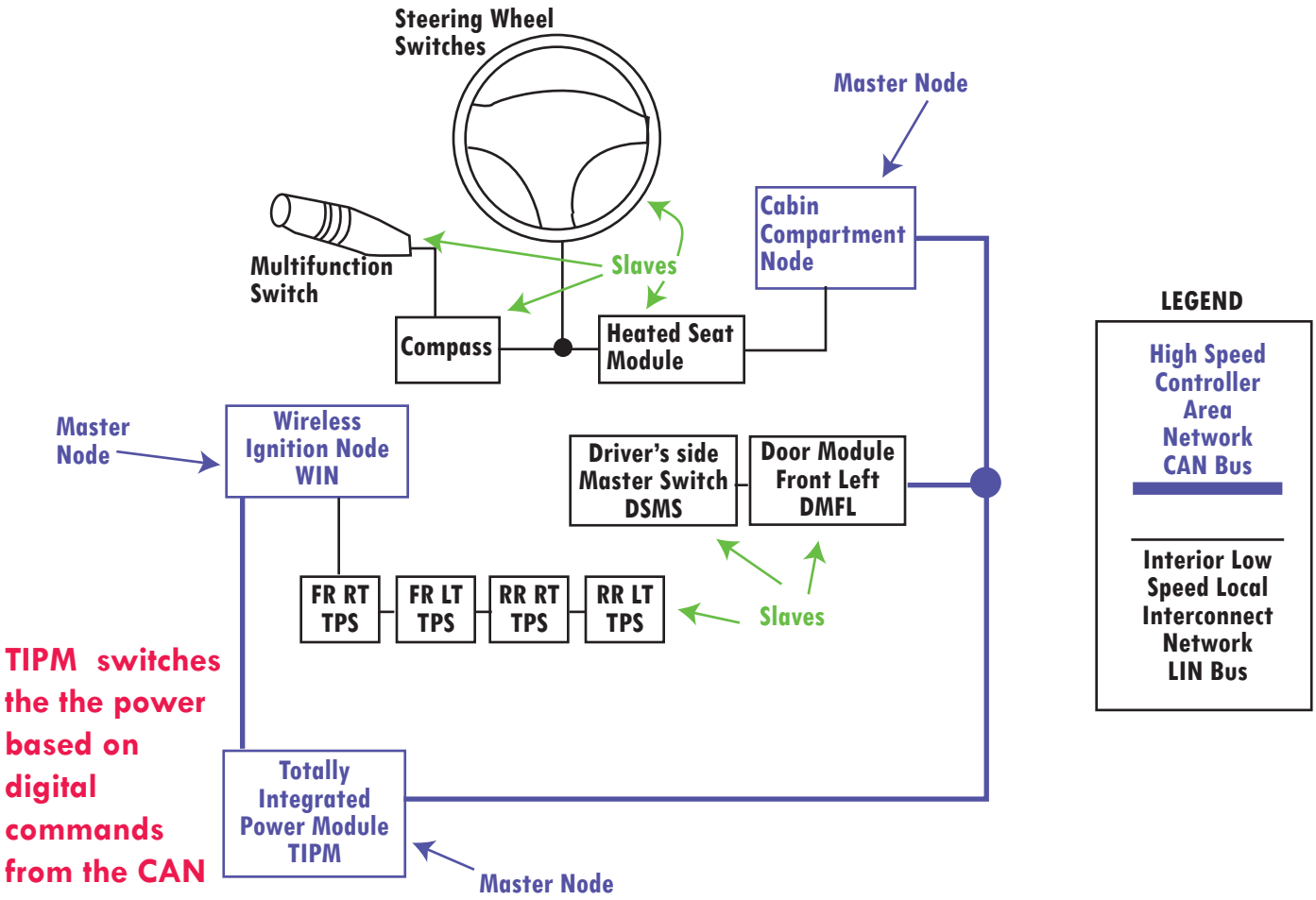


**Chrysler uses two different types of data networks in late model vehicles.**

The LIN Local Interconnect Network is used to move non-time-critical data between actuators and a higher speed bus. It's known as a "body function network." For example, air conditioning systems, doors, seats, column, climate control, switch panel, intelligent wipers, and sunroof—none of these need a high speed response. That's where LIN comes into play. It's perfect for automotive use because it operates on 12-volts DC and is inexpensive to implement. The maximum bus speed is 20K and the maximum cable length is 40 meters. Remember those old dial-up 56K modems? Well, this is less than half that speed. LIN is designed to use MASTER and SLAVE nodes. Each MASTER can have multiple SLAVES. Only one message is allowed on the bus at one time. So if you turn on the wipers and try to open the sunroof at the exact same time, the bus will only allow the first message to get through to the MASTER.

The MASTER nodes connect to the higher speed Controller Area Network (CAN) bus. The CAN network runs on twisted pair, shielded cable, or ribbon cable. There are three variants of the CAN network. BASIC CAN runs at a maximum of 250k. FULL CAN (also called extended frame CAN) runs at speeds up to 1Mbps (close to the speed of a slow DSL connection). The third CAN-FD is designed to run at up to 15Mbps. BASIC CAN has a minimum speed of 10k.

CAN is designed to proved message crash avoidance if two messages are sent at the same time. Rather than re-transmit the crashed message, as is done in an ethernet setup, the message frames in CAN contain a header (message identifier), basically a label telling the node how important the message is. The message with the higher priority label will get through first. So, if you're trying to accelerate and slam on the brakes at the same time, chances are the ABS messages will get priority. Auto makers can use a slow version of the CAN network the same functions as the LIN network above, but CAN costs more. So they use CAN for high-speed data requirements like engine management, anti-lock brake systems, and stability control. CAN networks also run on lower voltages with a high of 4.75-volts and a low of 0.5 volts.